Serial NO.	L800HS-6D1.K-01
Drawing NO.	01/A

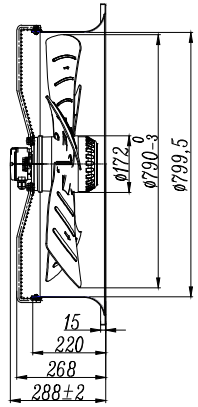

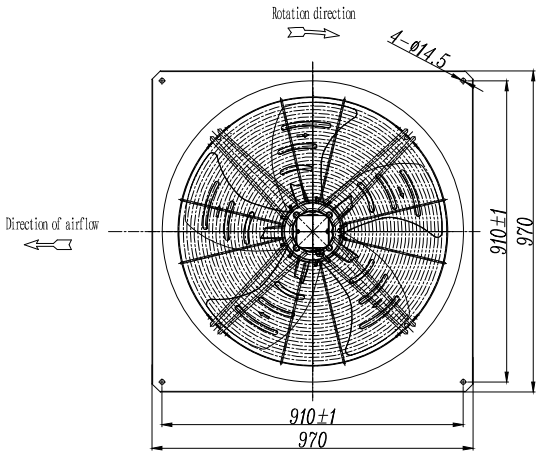

Label:

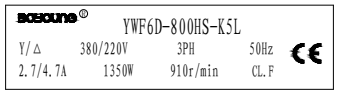

Wiring diagram:

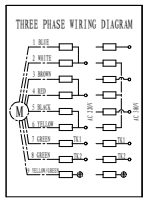

(Airflow-static pressure curve):

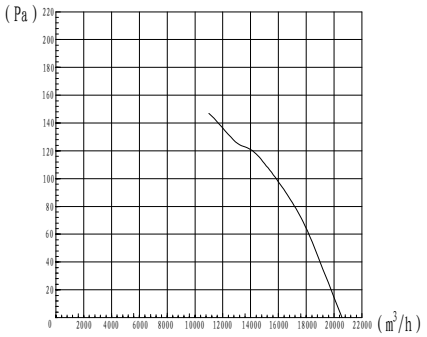

St. P.	Air Flow	Speed	Votage	Freq.	Current	Power
Pa	m3/h	RPM	V	Hz	Amp	W
0	20572	942	380	50	2.34	946
40	19000	934	380	50	2.42	1032
66	18000	932	380	50	2.48	1102
83	17003	926	380	50	2.52	1146
98	16007	922	380	50	2.57	1189
111	15002	920	380	50	2.61	1245
123	14003	917	380	50	2.64	1270
123	12997	914	380	50	2.67	1309
137	12000	911	380	50	2.70	1340
147	11007	908	380	50	2.72	1356

KingVent

Axial Fan

Partname: YWF6D-800H Axial Fan		Customer: TK-CI
Insulation class: F	Protection Class: IP54	Type of Duty: S1

Permissible ambient temperature: -40～+60℃

Approvals: CE

Nomenclature:

Model: YWF 6 D - 800
- Propeller Diameter
- D: Three-Phase E: Single-Phase
- Number of Motor Pole: 6 Pole
- External Rotor Fan Motor

Feature Code: H S - K 5 L
- Blade Shape: L Sickle-Shaped
- Quantity of Blade: 5
- Installation Form: inlet ring with square plate (grill mount with inlet ring)
- Airflow direction: B: Blowing S: Sucking
- Airflow volume code: H: High air.volume series

High -Voltage test according to EN 60335-1 2100V

Material/Surface Finishing: Blade-spec steel sheet/Black powder coating
Rotor-Silicon sheet Lamination with aluminum casting/ Black poweder coating
Frame, grille - cold drawn steel wire / black powder coating

Balance Grade: G6.3 (Propeller is dynamic balanced at two sides

Model	Feature Code	Wiring	Voltage	Frequency	Current	Power input	Speed	Capacitance	Air flow/max	Max.static pressure	N.W.	Noise
			V	Hz	A	W	r/min	μF	m³/h	Pa	Kg	dB(A)
YWF6D-800	HS-K5L.5AAB.211	Y	380	50	2.7	1350	910	/	20572	125	29	78
		Δ	220		4.7							

	Sign	Date
DRN BY	周晓伟	2020.07.23
CHK BY	曹广涛	2020.07.23
APVD BY	吴华君	2020.07.23

Specification

L800GS-6D1.K-01